6. Schematic Diagrams

6-1 Power ---------- 6-2

6-2 AV-Decoder/Main-Micom ---------- 6-3

6-3 Servo ---------- 6-4

6-4 Video ---------- 6-5

6-5 Audio ---------- 6-6

6-6 SACD ---------- 6-7

6-7 Front-Micom ---------- 6-8

6-8 DVI ---------- 6-9

6-9 Key ---------- 6-10

Block Identification of PCB

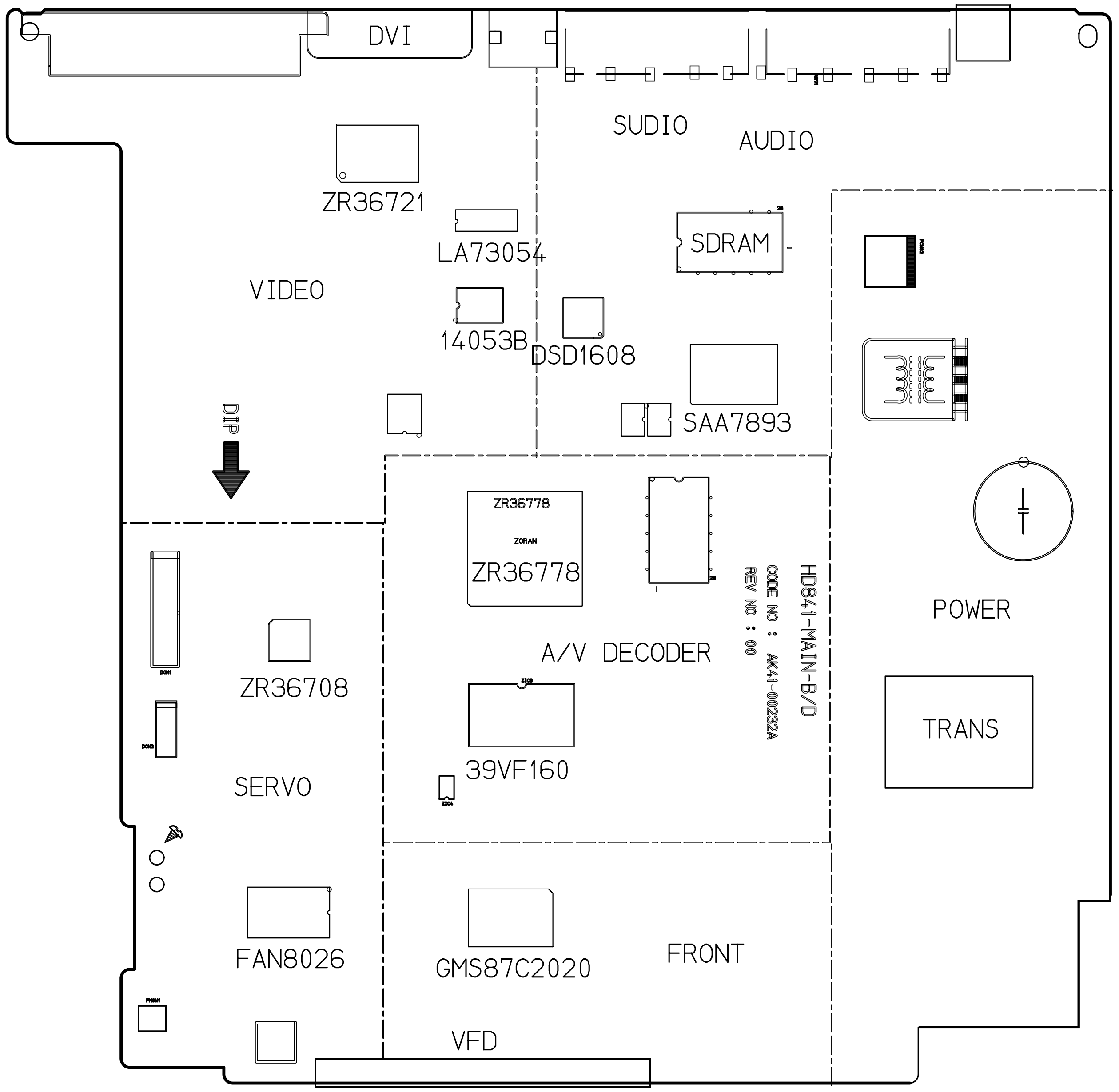

DVI
SUDIO
AUDIO
ZR36721
LA73054
SDRAM
VIDEO
14053B
DSD1608
SAA7893
DIP
ZR36778
ZORAN
ZR36778
HD841-MAIN-B/D
CODE NO : AK41-00232A
REV NO : 00
POWER
A/V DECODER
ZR36708
39VF160
TRANS
SERVO
FAN8026
GMS87C2020
FRONT
VFD

Main PCB (Component Side)

6-1 Power

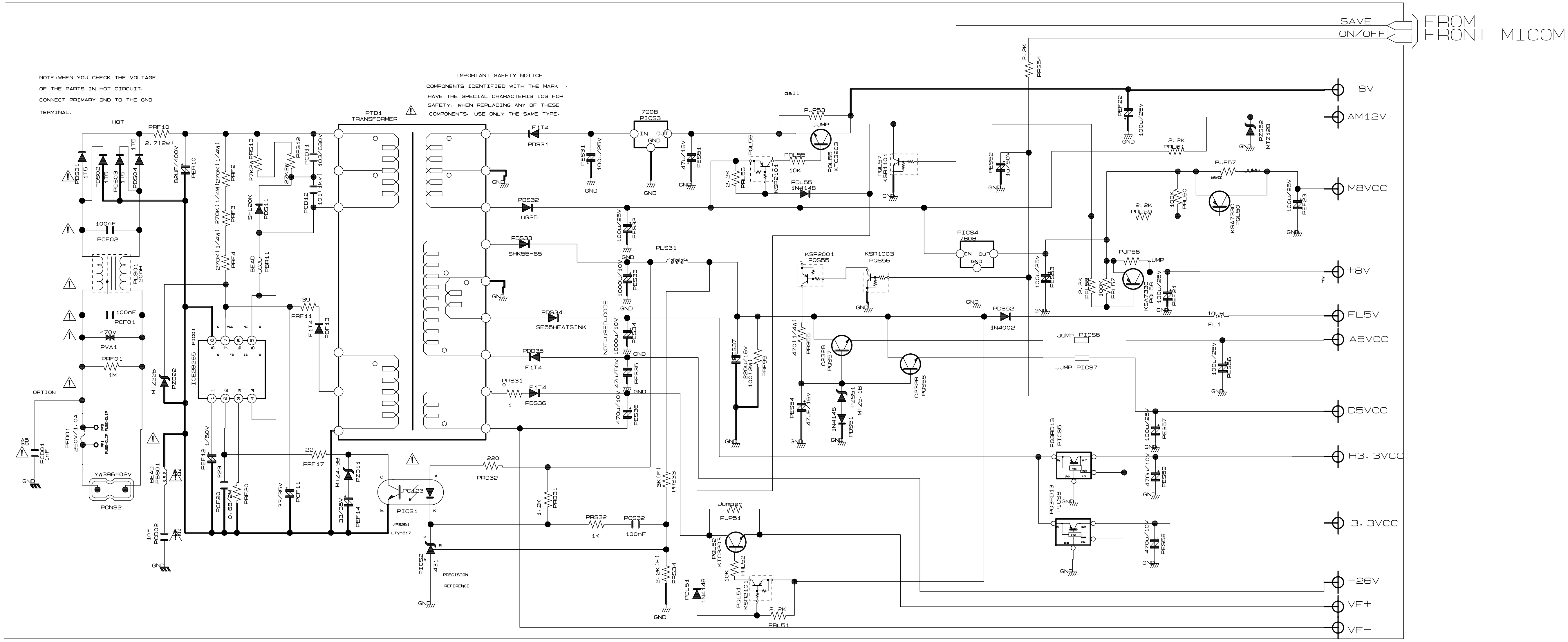
NOTE:WHEN YOU CHECK THE VOLTAGE
OF THE PARTS IN HOT CIRCUIT.
CONNECT PRIMARY GND TO THE GND
TERMINAL.
IMPORTANT SAFETY NOTICE
COMPONENTS IDENTIFIED WITH THE MARK ⚠.
HAVE THE SPECIAL CHARACTERISTICS FOR
SAFETY. WHEN REPLACING ANY OF THESE
COMPONENTS. USE ONLY THE SAME TYPE.
HOT
PRF10
2.7(2W)
PDS01
PDS02
PDS03
PDS04
1T5
82UF/400V
PER10
270K(1/4W)
PRF2
PRF3
PRF4
27K2W
PRS13
PPS12
PCD11
103/630V
PCD12
101(1kV)
SHL20K
PDS11
BEAD
PBR11
PTD1
TRANSFORMER
100nF
PCF02
PLS01
PCF01
470V
PVA1
PRF01
1M
OPTION
PFD01
250V/1.0A
PCD01
1nF
YW396-02V
PCNS2
BEAD
PBS01
PCD02
1nF
GND
MTZ22B
PZD22
ICE2B265
PIC01
39
PRF11
F1T4
PDF13
PEF12 1/50V
PCF20
223
0.68/2W
PRF20
33/35V
PCF11
22
PRF17
MTZ4.3B
PZD11
33/35V
PEF14
PC123
PICS1
LTV-817
PICS2
431
PRECISION
REFERENCE
220
PRD32
1.2K
PRD31
PRS32
1K
PCS32
100nF
3K(F)
PRS33
2.2K(F)
PRS34
F1T4
PDS31
PES31
100u/25V
7908
PICS3
IN OUT
GND
47u/16V
PES51
PDS32
UG2D
100u/25V
PES32
PDS33
SHK55-65
PLS31
1000u/10V
PES33
PDS34
SE55HEATSINK
NOT USED CODE
1000u/10V
PES34
PDD35
F1T4
47u/50V
PES35
PRS31
PDS36
470u/10V
PES36
dall
PJP53
JUMP
PQL55
KTC3203
PQL56
KSR2101
2.2K
PRL56
PRL55
10K
PDL55
1N4148
PQL57
KSR1101
PES52
1u/50V
PES37
220u/16V
PRF99
PICS4
7808
IN OUT
GND
KSR2001
PQS55
KSR1003
PQS56
470(1/4W)
PRS55
C2328
PQS57
PQS58
PES54
47uF/16V
1N4148
PDS51
PZS51
MTZ5.1B
PDS52
1N4002
JUMP PICS6
JUMP PICS7
Jumper
PJP51
PQL52
KTC3203
10K
PRL52
PQL51
KSR2101
PDL51
1N4148
2.2K
PRL51
2.2K
PRS54
PEF22
100u/25V
2.2K
PRL61
PZS52
MTZ12B
PJP57
JUMP
100K
PRL60
KSA733C
PQL50
2.2K
PRL59
100u/25V
PEF23
100u/25V
PES53
2.2K
PRL58
PRL57
PJP56
JUMP
KSA733C
PQL58
100u/25V
PEF21
10uH
FL1
100u/25V
PES56
PQ3RD13
PICS5
100u/25V
PES57
470u/10V
PES59
PQ3RD13
PICS8
470u/10V
PES58
SAVE
ON/OFF
FROM
FRONT MICOM
-8V
AM12V
M8VCC
+8V
FL5V
A5VCC
D5VCC
H3.3VCC
3.3VCC
-26V
VF+
VF-

6-2 AV-Decoder/Main-Micom

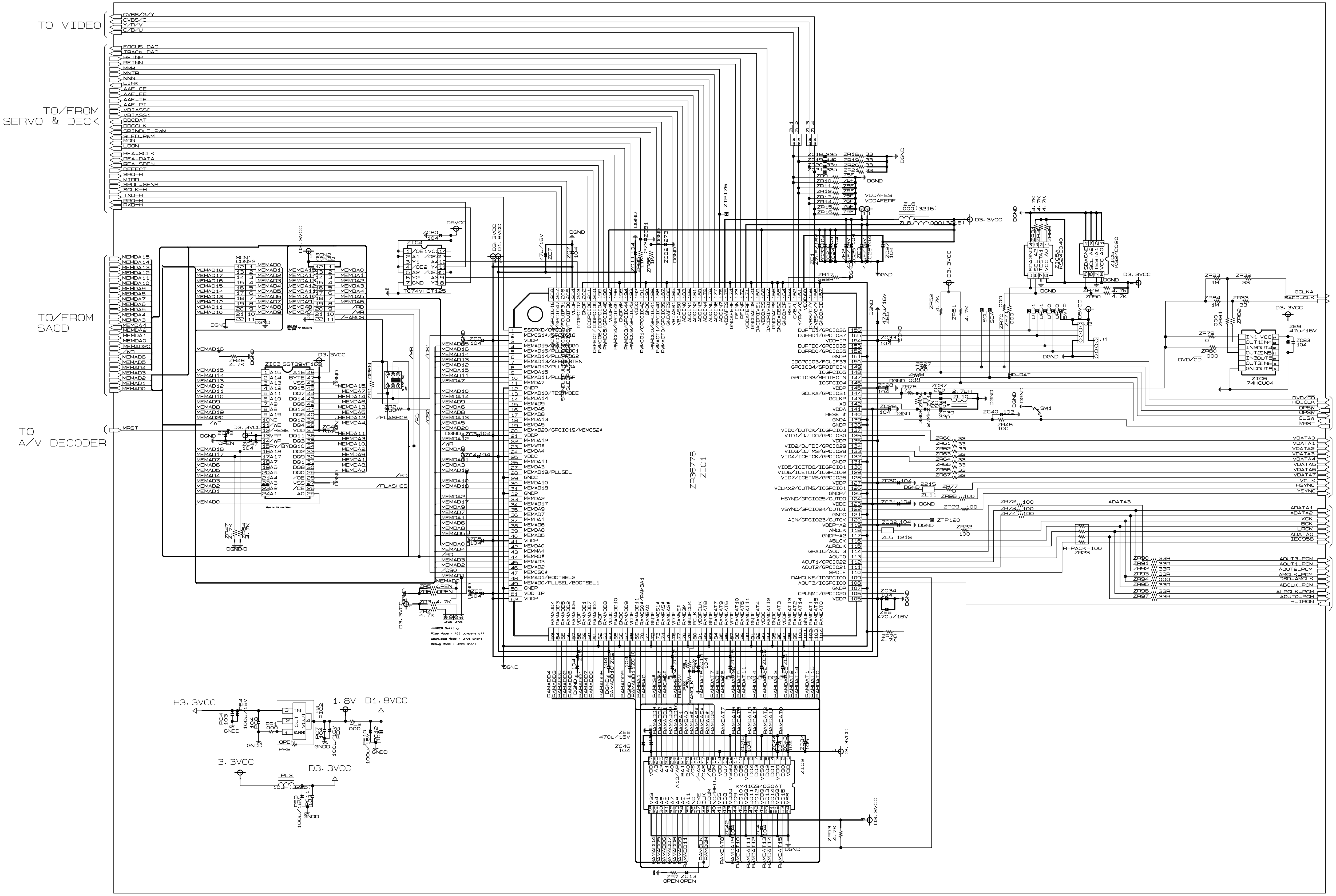
TO VIDEO
CVBS/G/Y
CVBS/C
Y/R/V
C/B/U
TO/FROM SERVO & DECK
FOCUS_DAC
TRACK_DAC
RFINP
RFINN
MMM
MNTR
NNN
LINK
AAF_CE
AAF_FE
AAF_TE
AAF_PI
VBIAS0
VBIAS1
DOCDAT
DOCCLK
SPINDLE_PWM
SLED_PWM
MON
LDON
RFA_SCLK
RFA_DATA
RFA_SDEN
DEFECT
SBQ-H
MIRR
SPDL_SENS
SCLK-H
TXD-H
SRQ-H
RXD-H
TO/FROM SACD
TO A/V DECODER
MRST
SCN1 CON32
SCN2 CON32
ZIC3 SST39VF160
ZIC4 74VHCT125
D5VCC
D3.3VCC
D1.8VCC
DGND
ZR36778 ZIC1
JUMPER Setting
Play Mode : All Jumpers off
Download Mode : JP01 Short
Debug Mode : JP00 Short
ZIC2 KM416S4030AT
ZIC5 AT24C02
ZIC6 74HC04
SW1
J1
R-PACK-100 ZR23
H3.3VCC
1.8V
D1.8VCC
3.3VCC
D3.3VCC
ZE8 470u/16V
ZC46 104
TO/FROM SERVO & DECK
DVD/CD
HD_CLK
OPSW
CLSW
MRST
TO DVI
VDATA0
VDATA1
VDATA2
VDATA3
VDATA4
VDATA5
VDATA6
VDATA7
VCLK
HSYNC
VSYNC
TO AUDIO
ADATA1
ADATA2
XCK
BCK
LRCK
ADATA0
IEC958
TO/FROM SACD
AOUT3_PCM
AOUT1_PCM
AOUT2_PCM
AMCLK_PCM
DSD_AMCLK
ABCLK_PCM
ALRCLK_PCM
AOUT0_PCM
H_IRQN
GCLKA
SACD_CLK

This Document can not be used without Samsung's authorization.

6-3 Servo

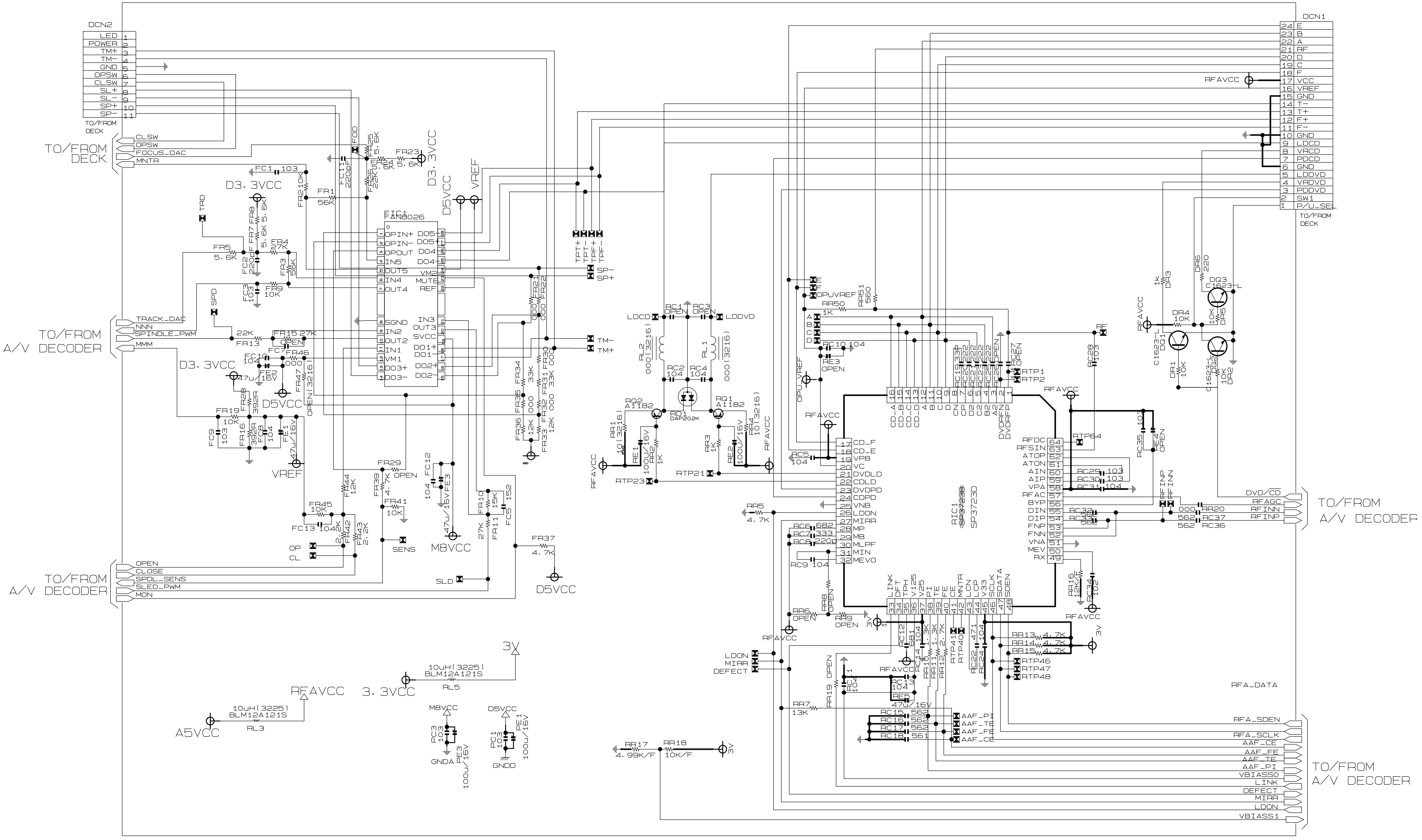
DCN2
LED
POWER
TM+
TM-
GND
OPSW
CLSW
SL+
SL-
SP+
SP-
TO/FROM DECK
TO/FROM DECK
CLSW
OPSW
FOCUS_DAC
MNTR
D3.3VCC
FIC1
FAN8026
OPIN+
OPIN-
OPOUT
IN5
OUT5
IN4
OUT4
SGND
IN2
OUT2
IN1
VM1
DO3+
DO3-
DO5+
DO5-
DO4+
DO4-
VM2
MUTE
REF
IN3
OUT3
SVCC
DO1+
DO1-
DO2+
DO2-
D5VCC
VREF
TPT+
TPT-
TPF+
TPF-
SP-
SP+
TM-
TM+
TO/FROM A/V DECODER
TRACK_DAC
NNN
SPINDLE_PWM
MMM
TO/FROM A/V DECODER
OPEN
CLOSE
SPDL_SENS
SLED_PWM
MON
OP
CL
SENS
SLD
M8VCC
D5VCC
RFAVCC
3.3VCC
A5VCC
3V
10uH(3225)
BLM12A121S
RL5
RL3
GNDA
GNDD
LDCD
LDDVD
RQ2
A1182
RQ1
A1182
RD1
DAP202K
RTP23
RTP21
RIC1
SP3723D
CD_F
CD_E
VPB
VC
DVDLD
CDLD
DVDPD
CDPD
VNB
LDON
MIRR
MP
MB
MLPF
MIN
MEVO
RFDC
RFSIN
ATOP
ATON
AIN
AIP
VPA
RFAC
BYP
DIN
DIP
FNP
FNN
VNA
MEV
RX
LINK
DFT
TPH
V125
V25
PI
FE
CE
MNTR
LCN
LCP
V33
SCLK
SDATA
SDEN
RTP1
RTP2
RTP64
RTP46
RTP47
RTP48
OPUVREF
LDON
MIRR
DEFECT
AAF_PI
AAF_TE
AAF_FE
AAF_CE
DCN1
E
B
A
RF
D
C
F
VCC
VREF
GND
T-
T+
F+
F-
GND
LDCD
VRCD
PDCD
GND
LDDVD
VRDVD
PDDVD
SW1
P/U_SEL
TO/FROM DECK
RFAVCC
DQ1
DQ2
DQ3
C1623-L
DVD/CD
RFAGC
RFINN
RFINP
TO/FROM A/V DECODER
RFA_DATA
RFA_SDEN
RFA_SCLK
AAF_CE
AAF_FE
AAF_TE
AAF_PI
VBIASS0
LINK
DEFECT
MIRR
LDON
VBIASS1
TO/FROM A/V DECODER

6-4 Video

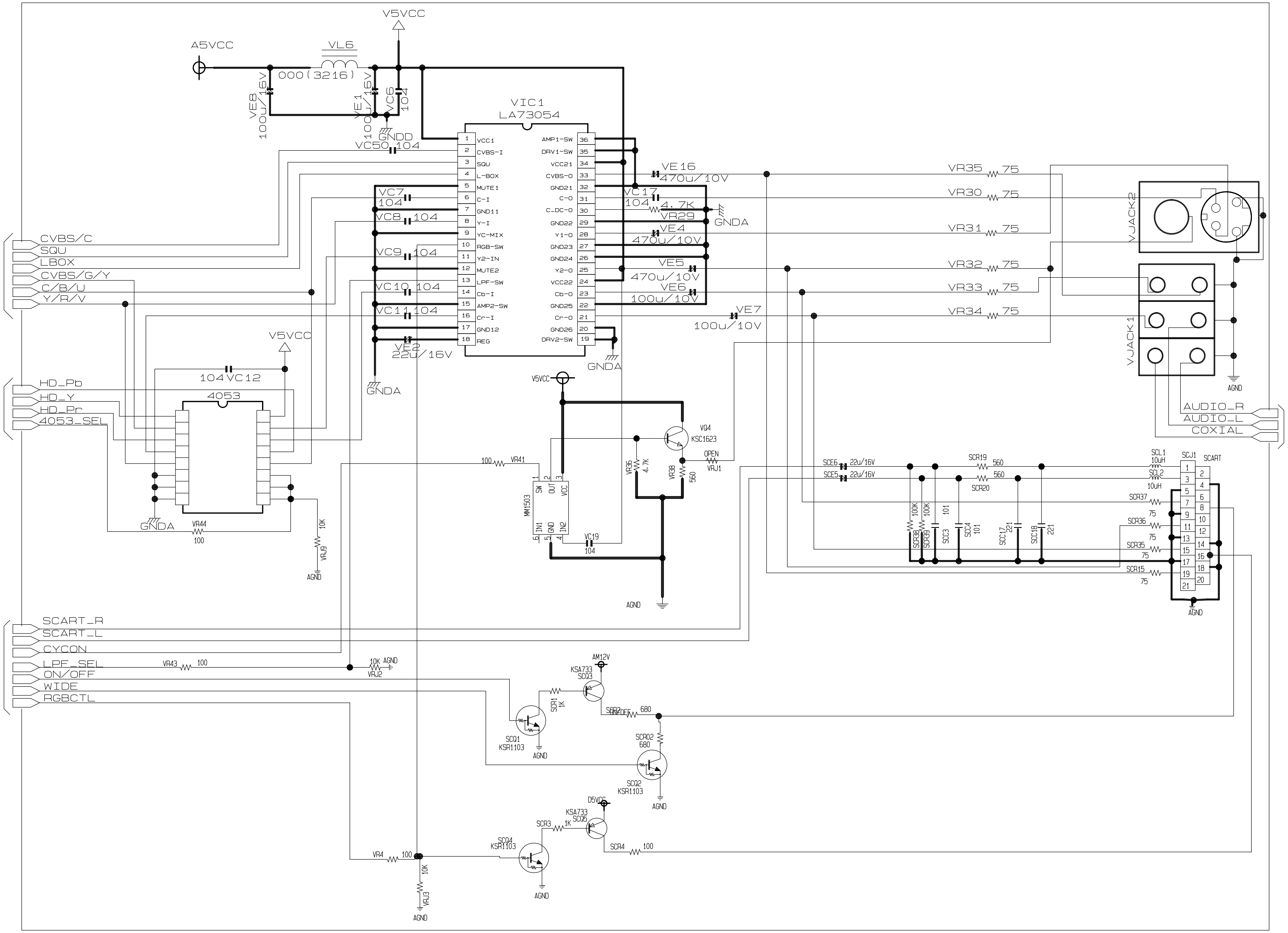
V5VCC
A5VCC
VL6
000(3216)
VE8
100u/16V
VE1
100u/16V
VC6
104
GNDD
VIC1
LA73054
VC50 104
VCC1
CVBS-I
SQU
L-BOX
MUTE1
C-I
GND11
Y-I
YC-MIX
RGB-SW
Y2-IN
MUTE2
LPF-SW
Cb-I
AMP2-SW
Cr-I
GND12
REG
AMP1-SW
DRV1-SW
VCC21
CVBS-O
GND21
C-O
C_DC-O
GND22
Y1-O
GND23
GND24
Y2-O
VCC22
Cb-O
GND25
Cr-O
GND26
DRV2-SW
VC7
104
VC8 104
VC9 104
VC10 104
VC11 104
VE2
22u/16V
GNDA
VE16
470u/10V
VC17
104
4.7K
VR29
VE4
470u/10V
VE5
470u/10V
VE6
100u/10V
VE7
100u/10V
VR35 75
VR30 75
VR31 75
VR32 75
VR33 75
VR34 75
VJACK2
VJACK1
AGND
FROM
A/V DECODER
CVBS/C
SQU
LBOX
CVBS/G/Y
C/B/U
Y/R/V
FROM
DVI
HD_Pb
HD_Y
HD_Pr
4053_SEL
104 VC12
4053
VR44
100
10K
VRJ9
V5VCC
VQ4
KSC1623
VR41
100
MM1503
SW
OUT
VCC
IN1
GND
IN2
VC19
104
VR36
4.7K
VR38
560
OPEN
VRJ1
AUDIO_R
AUDIO_L
COXIAL
FROM
AUDIO
SCE6 22u/16V
SCE5 22u/16V
SCR19 560
SCR20 560
SCL1
10uH
SCL2
10uH
SCJ1
SCART
SCR37
SCR36 75
SCR35 75
SCR15 75
SCR38 100K
SCR39 100K
SCC3 101
SCC4 101
SCC17 221
SCC18 221
FROM
A/V DECODER
SCART_R
SCART_L
CYCON
LPF_SEL
ON/OFF
WIDE
RGBCTL
VR43 100
10K AGND
VRJ2
AM12V
KSA733
SCQ3
SCR1
1K
SCR2 680
SCQ1
KSR1103
SCR02
680
SCQ2
KSR1103
D5VCC
KSA733
SCQ5
SCR3 1K
SCQ4
KSR1103
SCR4 100
VR4 100
10K
VRJ3

6-5 Audio

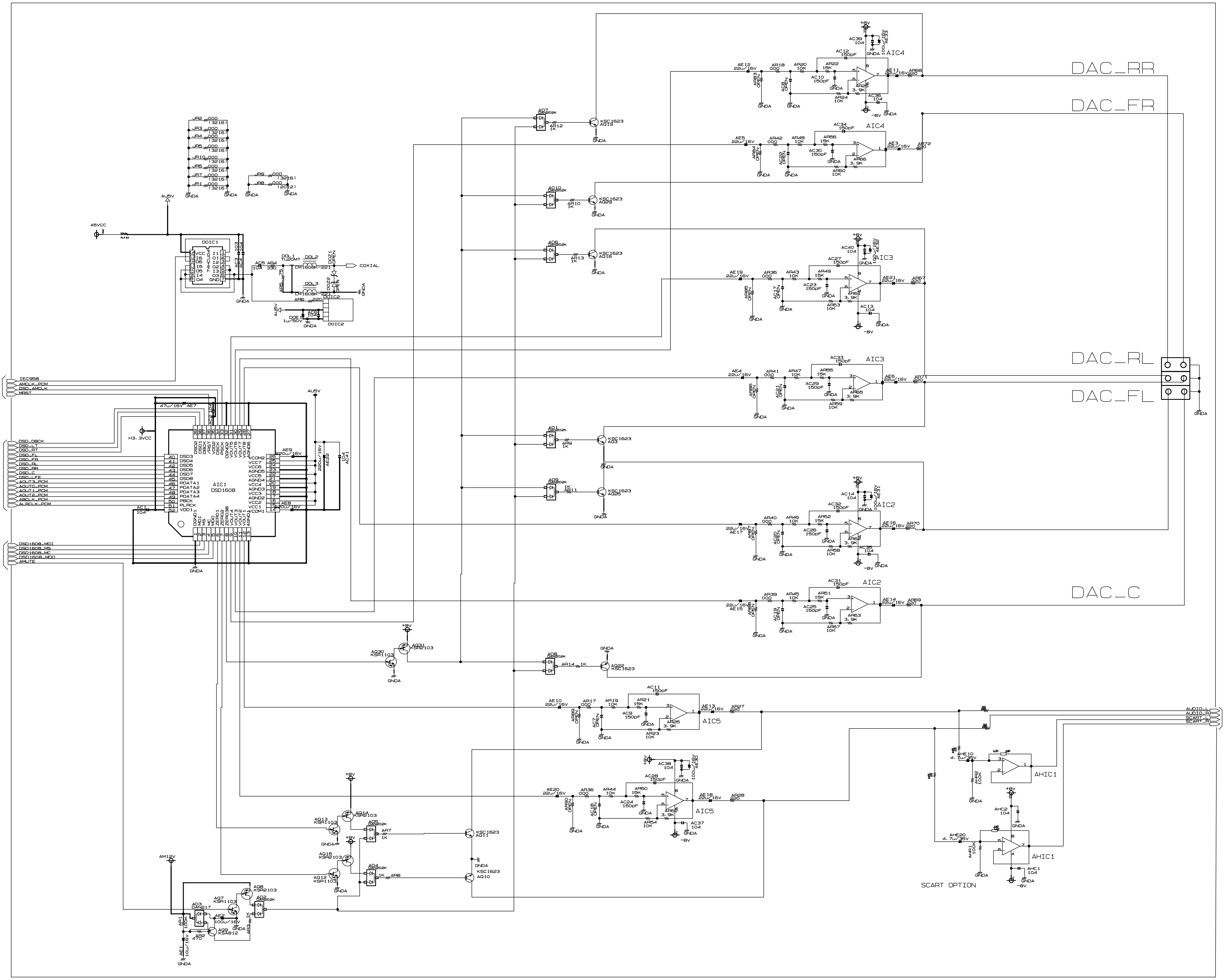
DAC_RR
DAC_FR
DAC_RL
DAC_FL
DAC_C
FROM
A/V DECODER
IEC958
AMCLK_PCM
DSD_AMCLK
MRST
FROM
SACD
DSD_DBCK
DSD_LT
DSD_RT
DSD_FL
DSD_FR
DSD_RL
DSD_RR
DSD_C
DSD_LFE
AOUT3_PCM
AOUT0_PCM
AOUT1_PCM
AOUT2_PCM
ABCLK_PCM
ALRCLK_PCM
FROM
SACD
DSD1608_MDI
DSD1608_MS
DSD1608_MC
DSD1608_MDO
AMUTE
AIC1
DSD1608
H3.3VCC
47u/16V AE7
AC1
104
AU5V
A5VCC
DOIC1
DOIC2
COXIAL
AIC2
AIC3
AIC4
AIC5
AHIC1
SCART OPTION
AUDIO_L
AUDIO_R
SCART_L
SCART_R
TO
VIDEO
GNDA
AM12V

6-6 SACD

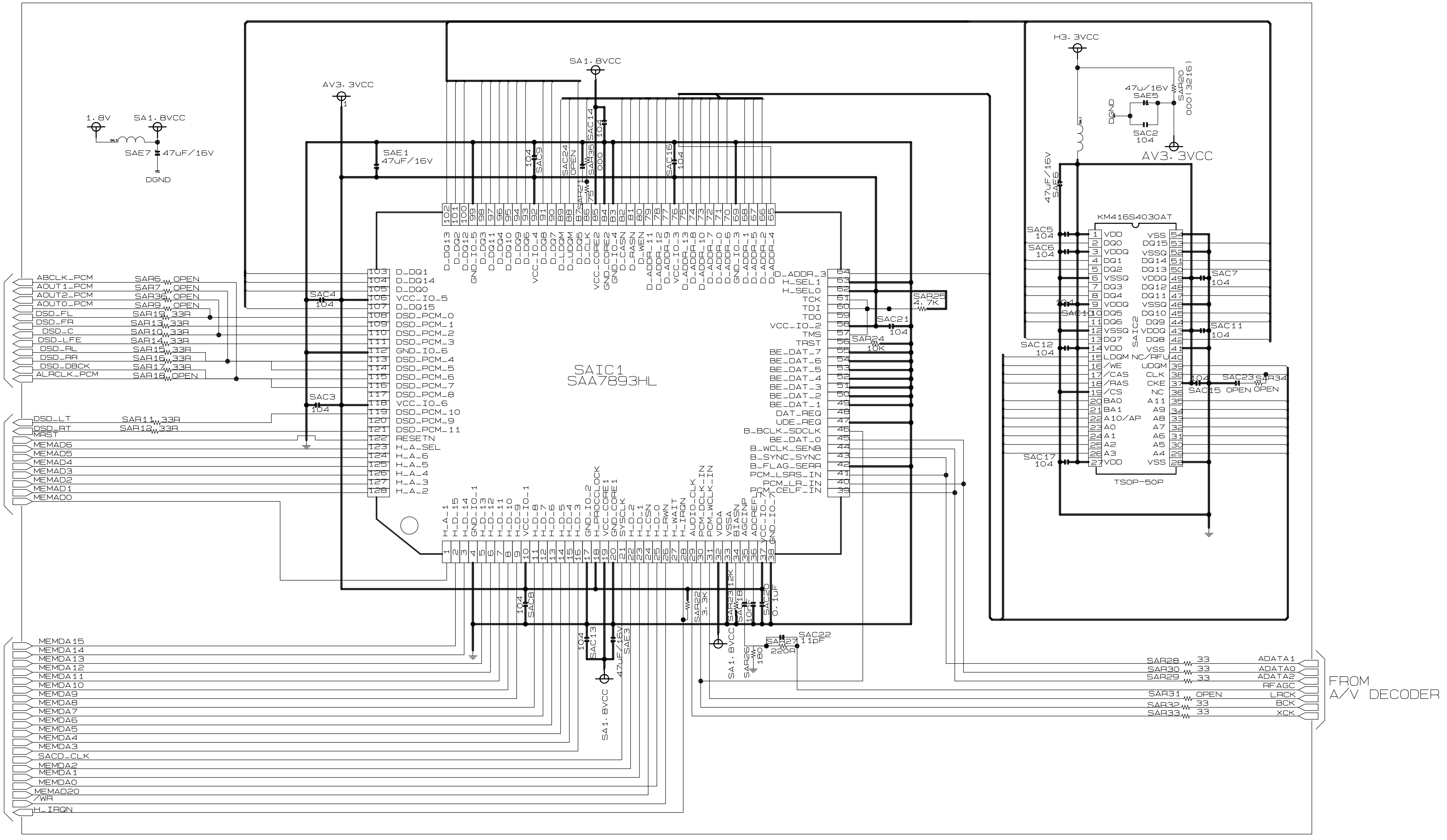
TO AUDIO
ABCLK_PCM
AOUT1_PCM
AOUT2_PCM
AOUT0_PCM
DSD_FL
DSD_FR
DSD_C
DSD_LFE
DSD_RL
DSD_RR
DSD_DBCK
ALRCLK_PCM
SAR6 OPEN
SAR7 OPEN
SAR36 OPEN
SAR9 OPEN
SAR19 33R
SAR13 33R
SAR10 33R
SAR14 33R
SAR15 33R
SAR16 33R
SAR17 33R
SAR18 OPEN
FROM/TO A/V DECODER AUDIO
DSD_LT
DSD_RT
MRST
MEMAD6
MEMAD5
MEMAD4
MEMAD3
MEMAD2
MEMAD1
MEMAD0
SAR11 33R
SAR12 33R
FROM A/V DECODER
MEMDA15
MEMDA14
MEMDA13
MEMDA12
MEMDA11
MEMDA10
MEMDA9
MEMDA8
MEMDA7
MEMDA6
MEMDA5
MEMDA4
MEMDA3
SACD_CLK
MEMDA2
MEMDA1
MEMDA0
MEMAD20
/WR
H_IRQN
1.8V
SA1.8VCC
SAE7 47uF/16V
DGND
AV3.3VCC
SAE1 47uF/16V
SA1.8VCC
SAC4 104
SAC3 104
SAC9 104
SAC24 OPEN
SAR35 000
SAC14 104
SAR21 75
SAC16 104
SAIC1
SAA7893HL
SAC21 104
SAR25 4.7K
SAR24 10K
SAC8 104
SAC13 104
SAE3 47uF/16V
SA1.8VCC
SAR22 3.3K
SAR23 12K
SAC18 10nF
SAC20 0.1uF
SAC22 11pF
SAR27 220R
SAR26 180
SA1.8VCC
H3.3VCC
47u/16V SAE5
SAR20 000(3216)
SAC2 104
AV3.3VCC
47uF/16V SAE6
KM416S4030AT
SAIC2
TSOP-50P
SAC5 104
SAC6 104
SAC10
SAC12 104
SAC17 104
SAC7 104
SAC11 104
SAC15 104
SAC23 OPEN
SAR34 OPEN
FROM A/V DECODER
ADATA1
ADATA0
ADATA2
RFAGC
LRCK
BCK
XCK
SAR28 33
SAR30 33
SAR29 33
SAR31 OPEN
SAR32 33
SAR33 33

6-7 Front-Micom

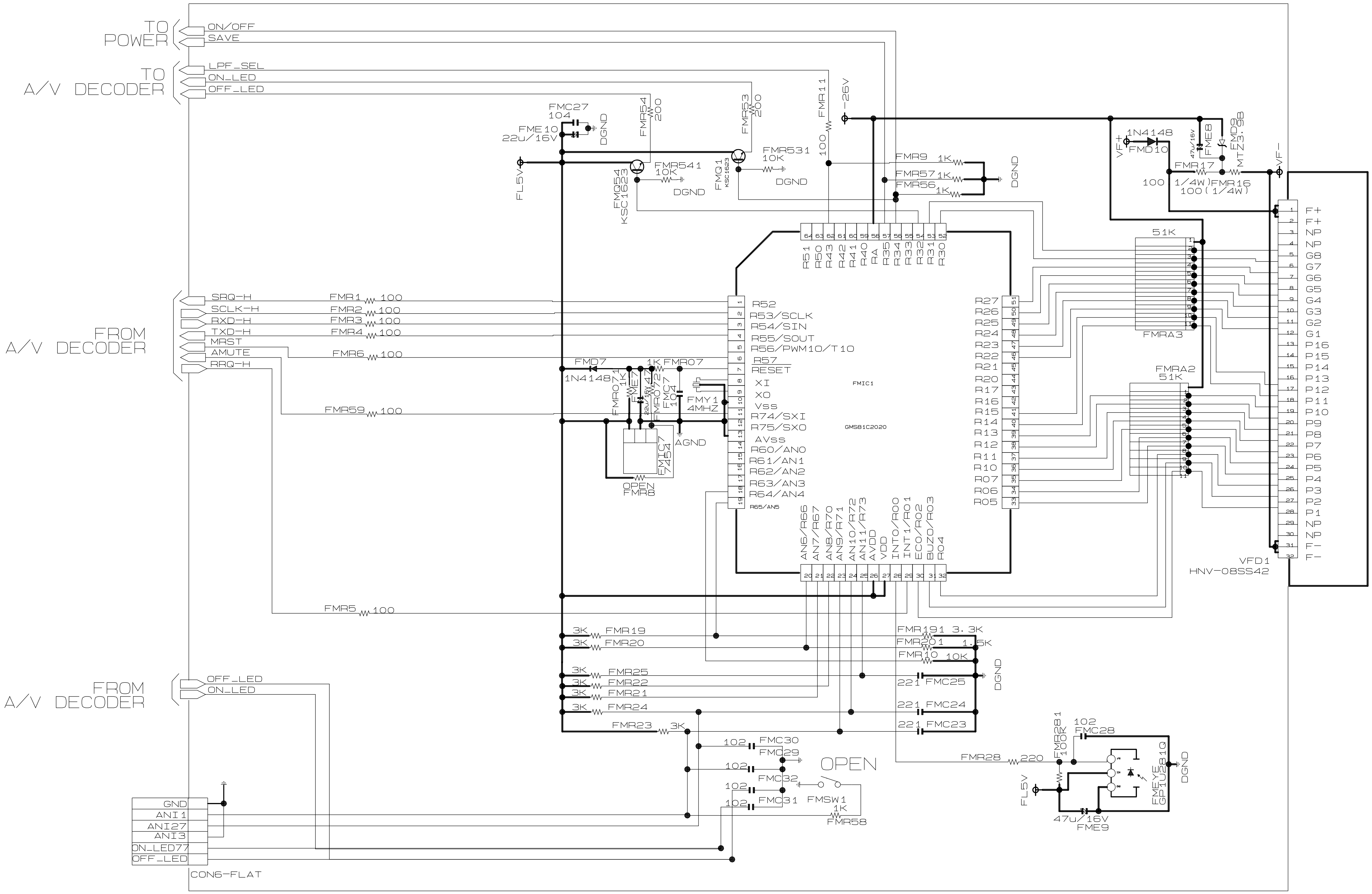
TO POWER
ON/OFF
SAVE
TO A/V DECODER
LPF_SEL
ON_LED
OFF_LED
FROM A/V DECODER
SRQ-H
SCLK-H
RXD-H
TXD-H
MRST
AMUTE
RRQ-H
FROM A/V DECODER
OFF_LED
ON_LED
FMC27 104
FME10 22u/16V
DGND
FMR54 200
FMR53 200
FMR11 100
-26V
FL5V
FMQ54 KSC1623
FMR541 10K
DGND
FMQ1 KSC1623
FMR531 10K
DGND
FMR9 1K
FMR57 1K
FMR56 1K
DGND
VF+
1N4148
FMD10
FME8 47u/16V
FMD9 MTZ3.9B
VF-
FMR17 100 1/4W
FMR16 100(1/4W)
51K
FMRA3
FMRA2 51K
FMR1 100
FMR2 100
FMR3 100
FMR4 100
FMR6 100
FMR59 100
FMR5 100
FMD7 1N4148
FMR071 1K
FME7 22u/16V
FMR072 47
FMC7 104
1K FMR07
FMY1 4MHZ
AGND
FMIC7 7454
OPEN FMR8
FMIC1
GMS81C2020
R51 R50 R43 R42 R41 R40 RA R35 R34 R33 R32 R31 R30
R52
R53/SCLK
R54/SIN
R55/SOUT
R56/PWM10/T10
R57
RESET
XI
XO
Vss
R74/SXI
R75/SXO
AVss
R60/AN0
R61/AN1
R62/AN2
R63/AN3
R64/AN4
R65/AN5
AN6/R66 AN7/R67 AN8/R70 AN9/R71 AN10/R72 AN11/R73 AVDD VDD INT0/R00 INT1/R01 EC0/R02 BUZ0/R03 R04
R27 R26 R25 R24 R23 R22 R21 R20 R17 R16 R15 R14 R13 R12 R11 R10 R07 R06 R05
F+ F+ NP NP G8 G7 G6 G5 G4 G3 G2 G1 P16 P15 P14 P13 P12 P11 P10 P9 P8 P7 P6 P5 P4 P3 P2 P1 NP NP F- F-
VFD1 HNV-08SS42
3K FMR19
3K FMR20
3K FMR25
3K FMR22
3K FMR21
3K FMR24
FMR23 3K
FMR191 3.3K
FMR201 1.5K
FMR10 10K
221 FMC25
221 FMC24
221 FMC23
DGND
102 FMC30
102 FMC29
102 FMC32
102 FMC31
OPEN
FMSW1
1K FMR58
FMR28 220
FMR281 100K
102 FMC28
FL5V
FMEYE GP1U281Q
DGND
47u/16V FME9
GND
ANI1
ANI27
ANI3
ON_LED77
OFF_LED
CON6-FLAT

6-8 DVI

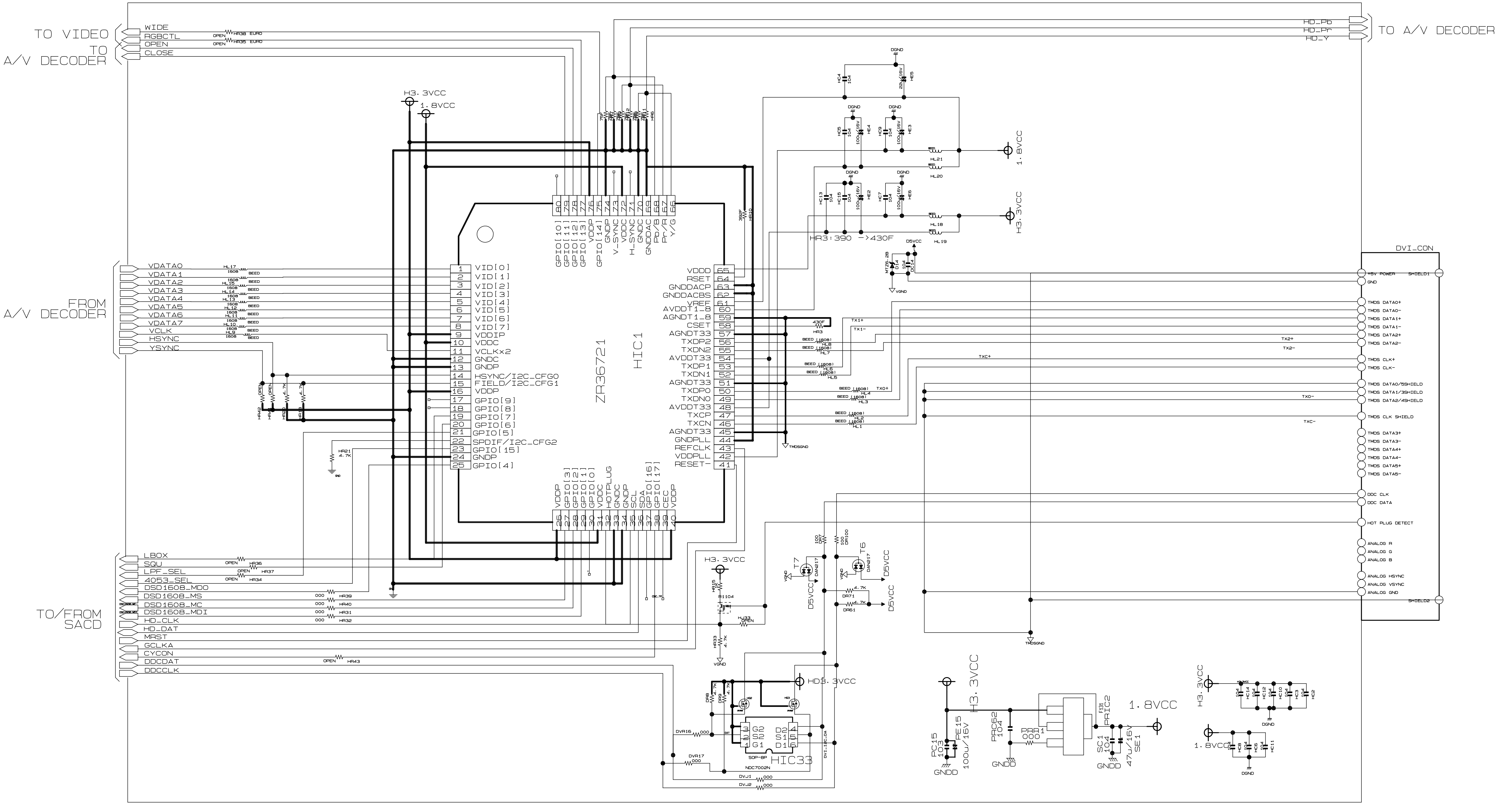
TO VIDEO
TO A/V DECODER
WIDE
RGBCTL
OPEN
CLOSE
TO A/V DECODER
HD_Pb
HD_Pr
HD_Y
H3.3VCC
1.8VCC
FROM A/V DECODER
VDATA0
VDATA1
VDATA2
VDATA3
VDATA4
VDATA5
VDATA6
VDATA7
VCLK
HSYNC
YSYNC
HIC1
ZR36721
VID[0]
VID[1]
VID[2]
VID[3]
VID[4]
VID[5]
VID[6]
VID[7]
VDDIP
VDDC
VCLKx2
GNDC
GNDP
HSYNC/I2C_CFG0
FIELD/I2C_CFG1
VDDP
GPIO[9]
GPIO[8]
GPIO[7]
GPIO[6]
GPIO[5]
SPDIF/I2C_CFG2
GPIO[15]
GNDP
GPIO[4]
VDDD
RSET
GNDDACP
GNDDACBS
VREF
AVDDT1_8
AGNDT1_8
CSET
AGNDT33
TXDP2
TXDN2
AVDDT33
TXDP1
TXDN1
AGNDT33
TXDP0
TXDN0
AVDDT33
TXCP
TXCN
AGNDT33
GNDPLL
REFCLK
VDDPLL
RESET-
GPIO[10]
GPIO[11]
GPIO[12]
GPIO[13]
VDDP
GPIO[14]
GNDP
V_SYNC
VDDC
H_SYNC
GNDC
GNDDAC
Pb/B
Pr/R
Y/G
VDDP
GPIO[3]
GPIO[2]
GPIO[1]
GPIO[0]
VDDC
HOTPLUG
GNDC
GNDP
SCL
SDA
GPIO[16]
GPIO[17]
CEC
VDDP
HR3:390 ->430F
1.8VCC
H3.3VCC
DVI_CON
+5V POWER
GND
TMDS DATA0+
TMDS DATA0-
TMDS DATA1+
TMDS DATA1-
TMDS DATA2+
TMDS DATA2-
TMDS CLK+
TMDS CLK-
TMDS DATA0/5SHIELD
TMDS DATA1/3SHIELD
TMDS DATA2/4SHIELD
TMDS CLK SHIELD
TMDS DATA3+
TMDS DATA3-
TMDS DATA4+
TMDS DATA4-
TMDS DATA5+
TMDS DATA5-
DDC CLK
DDC DATA
HOT PLUG DETECT
ANALOG R
ANALOG G
ANALOG B
ANALOG HSYNC
ANALOG VSYNC
ANALOG GND
SHIELD1
SHIELD2
TMDSGND
TO/FROM SACD
LBOX
SQU
LPF_SEL
4053_SEL
DSD1608_MDO
DSD1608_MS
DSD1608_MC
DSD1608_MDI
HD_CLK
HD_DAT
MRST
GCLKA
CYCON
DDCDAT
DDCCLK
H3.3VCC
T7
T6
D5VCC
HD5.3VCC
HIC33
NDC7002N
H3.3VCC
PC15
103
GNDD
PE15
100u/16V
PRC62
104
PRR1
000
PRIC2
SC1
104
47u/16V
SE1
1.8VCC
H3.3VCC
1.8VCC
DGND

6-9 Key

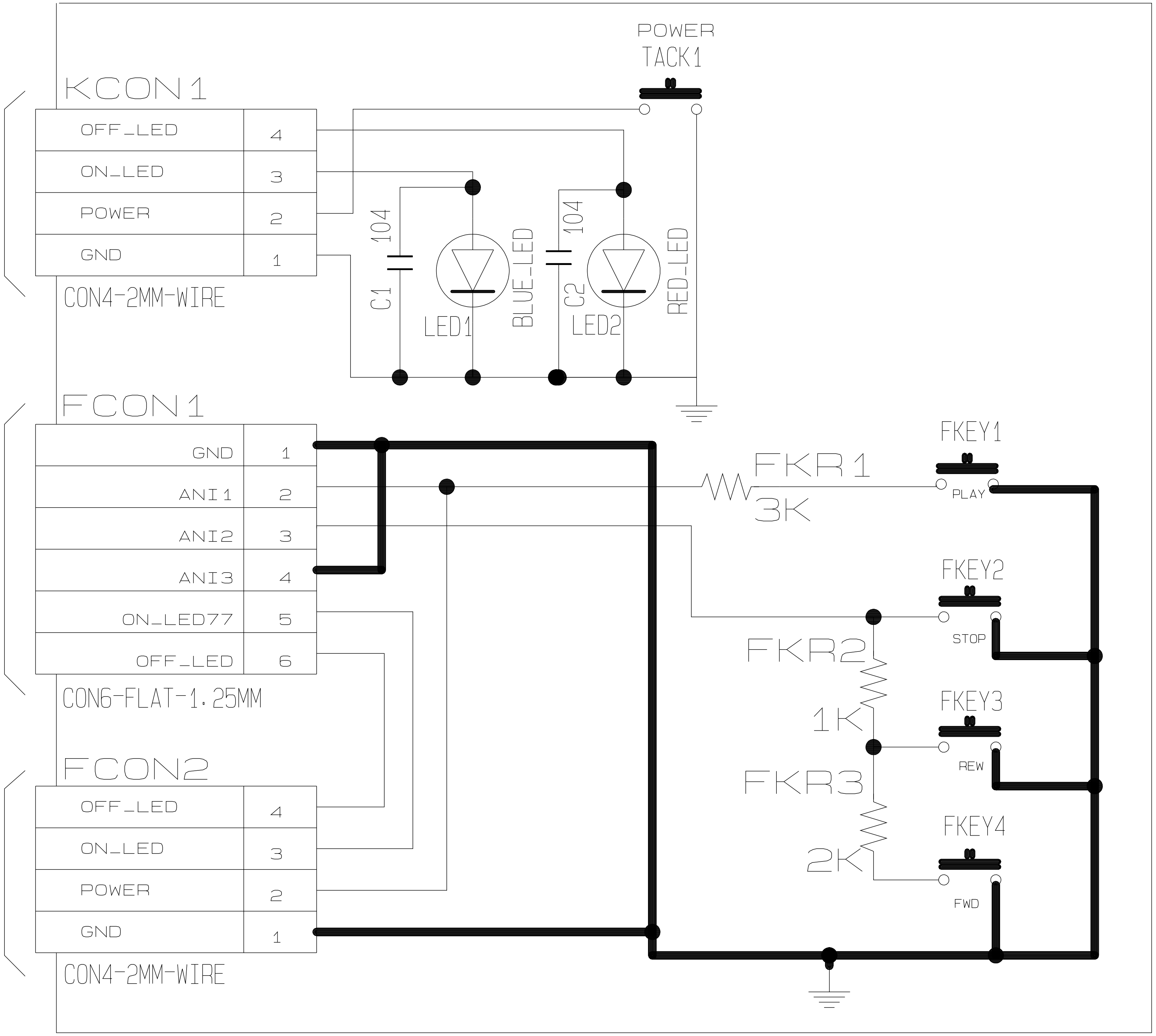
POWER
TACK1
KCON1
OFF_LED 4
ON_LED 3
POWER 2
GND 1
TO CONTROL KEY
CON4-2MM-WIRE
C1
104
LED1
BLUE_LED
C2
104
LED2
RED_LED
FCON1
GND 1
ANI1 2
ANI2 3
ANI3 4
ON_LED77 5
OFF_LED 6
TO FRONT MICOM
CON6-FLAT-1.25MM
FKR1
3K
FKEY1
PLAY
FKEY2
STOP
FKR2
1K
FKEY3
REW
FKR3
2K
FKEY4
FWD
FCON2
OFF_LED 4
ON_LED 3
POWER 2
GND 1
FROM POWER KEY
CON4-2MM-WIRE